OMME2750

Omme's non-marking tracks are very gentle on sensitive flooring, and the radio-control drive provides ease of manoeuvring in tight areas. With a stowed width of only 1.1 m, the Omme 2750 is perfect for driving down narrow paths and through small gate openings. You will find these Spider Lifts providing solutions to the most difficult access problems in many countries around the world, including Australia and New Zealand!

At only 3725 kg in weight, this 27 m Spider Lift can easily be transported and even craned into difficult locations. (Lifting points and procedures are standard with all Monitor Spider Lifts.)

The Omme's all have a huge amount of travel in their dual position stabiliser legs, allowing them to set up on the most difficult areas, including sloping or very uneven terrain.

Above left: The 2750 demonstrates doorway access, and the gentle non-marking tracks do not damage fragile surfaces.

Above middle: The strong steel boom glides out on a series of large rollers giving an exceptionally smooth ride and very stable platform.

Above right: The basket is easily removed and access indoors is a breeze.

OMME2750

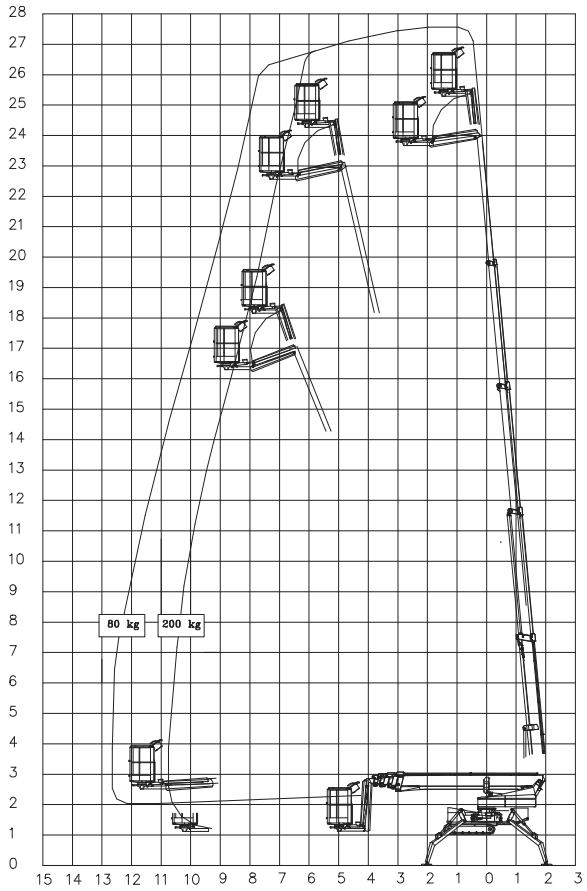

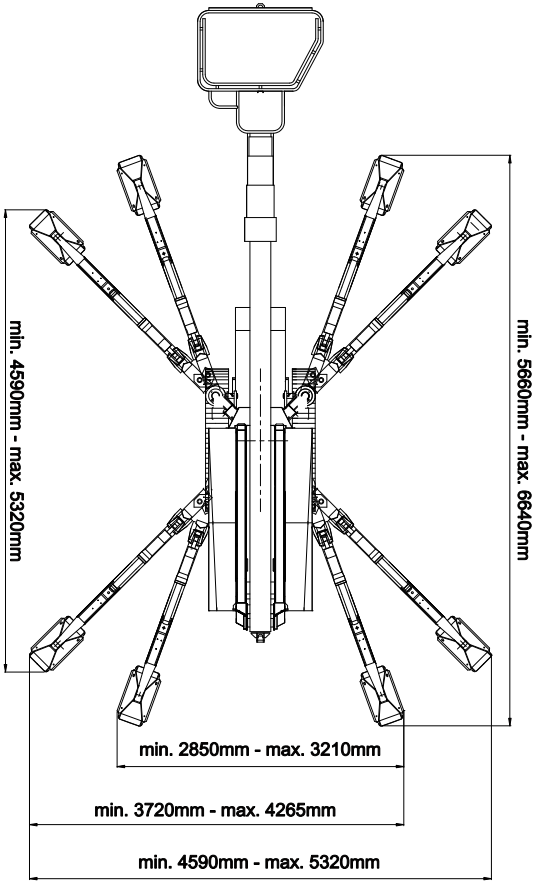

Max working height	**27.20 m**
Max working height in narrow set	19.50 m
Max horizontal outreach	**12.60 m**
Max SWL	200 kg
Weight: Std tracks	**3725 kg**
: Expandable tracks	3875 kg
Turret rotation	710 °
Basket rotation	100 °
Ground pressure driving (approx)	55 kN/m2
Max stabiliser force	24.8 kN
Max stabiliser pressure (std foot pad)	198 kN/m2
Traffic load (live load) travelling	4.2 kN/m2
Traffic load (live load) stabilised wide	2.1 kN/m2
Traffic load (live load) stabilised narrow	2.9 kN/m2
Auto levelling	Std
Max slope for stabilisers (no extra pads)	21.8 °
Gradeability lengthwise	19.3 °
Gradeability sideways	14 °
Standard power source	Kubota 20 Hp Diesel
Optional power source	N/A
Dual power options	Batteries
Expanding tracks	Optional
Drive Speed	1.45 km/h
Radio control	Std
Electric emergency lowering	Std

(All specs E&OE and subject to change)

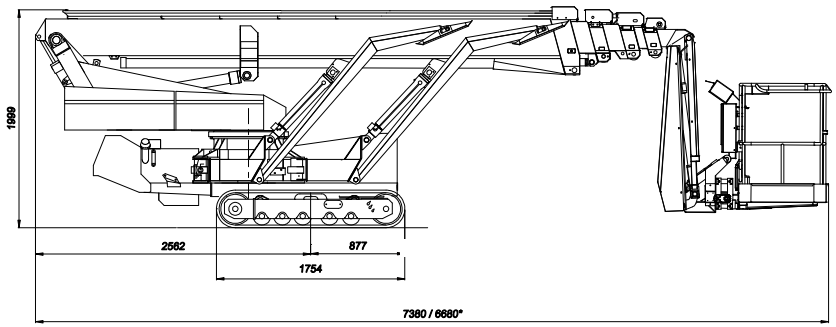

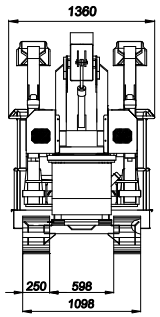

SEE THE 2750
IN ACTION