OMME2350

With features including dual power, auto-level, adjustable fly-jib etc, the 23 m Omme Spider Lift weighs only 3250 kg, making it the perfect machine for load-sensitive flooring. The soft non-marking rubber tracks are very gentle on fragile surfaces.

The high quality Danish build coupled with its simple design makes these Omme's a great choice for operator satisfaction and long life reliability.

Being only 1.1 m wide, the Omme can access many areas that are inaccessible to other machinery. With the 24 volt battery system, in addition to the powerful Kubota diesel engine, the Omme is just as versatile indoors as outdoors! The ability to take such a tall machine inside difficult buildings can open up enormous possibilities and save a lot of time and money compared to resorting to manual labour and scaffolding.

Above left: The huge amount of travel in the Omme's stabiliser legs allows it to be set up on very difficult sloping ground.

Above middle: Variable position stabilisers let these Spider Lifts work in the most difficult locations.

Above right: Sloping ground, load sensitive surfaces, difficult access? Whistle up an Omme!

OMME2350

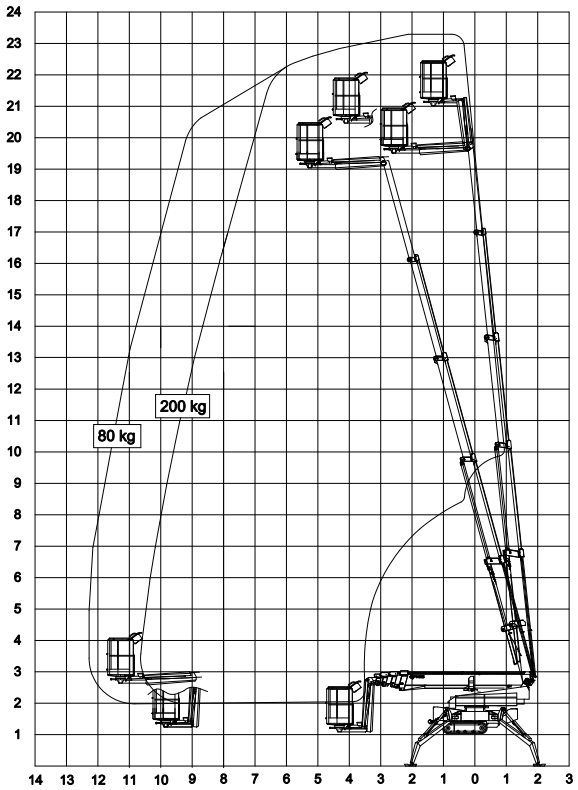

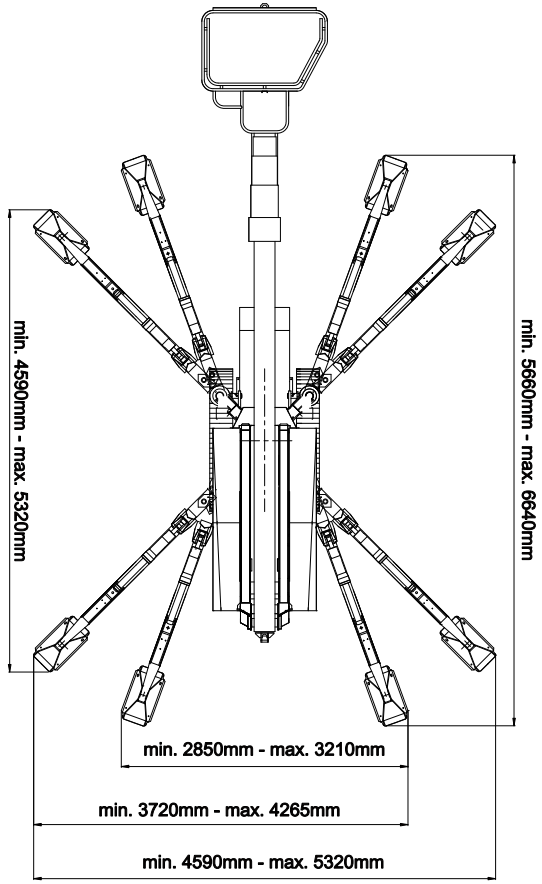

Max working height	**23.10 m**
Max working height in narrow set	22.60 m
Max horizontal outreach	**12.20 m**
Max SWL	200 kg
Weight: Std tracks	**3250 kg**
: Expandable tracks	3390 kg
Turret rotation	710 °
Basket rotation	100 °
Ground pressure driving (approx)	67 kN/m2
Max stabiliser force	19.8 kN
Max stabiliser pressure (std foot pad)	159 kN/m2
Traffic load (live load) travelling	4.1 kN/m2
Traffic load (live load) stabilised wide	1.8 kN/m2
Traffic load (live load) stabilised narrow	2.6 kN/m2
Auto levelling	Std
Max slope for stabilisers (no extra pads)	21.8 °
Gradeability lengthwise	19.3 °
Gradeability sideways	14 °
Standard power source	Kubota 20 Hp Diesel
Optional power source	N/A
Dual power options	Batteries
Expanding tracks	Optional
Drive Speed	1.45 km/h
Radio control	Std
Electric emergency lowering	Std

(All specs E&OE and subject to change)

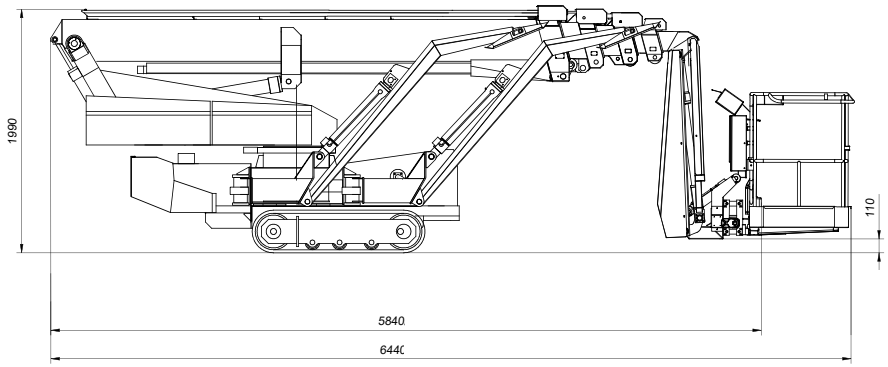

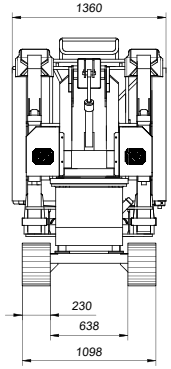

SEE THE 2350
IN ACTION